Corporate Reporting (INT) (P2)

This syllabus and study guide is designed to help with planning study and to provide detailed information on what could be assessed in any examination session.

THE STRUCTURE OF THE SYLLABUS AND STUDY GUIDE

Relational diagram of paper with other papers

This diagram shows direct and indirect links between this paper and other papers preceding or following it. Some papers are directly underpinned by other papers such as Advanced Performance Management by Performance Management. These links are shown as solid line arrows. Other papers only have indirect relationships with each other such as links existing between the accounting and auditing papers. The links between these are shown as dotted line arrows. This diagram indicates where you are expected to have underpinning knowledge and where it would be useful to review previous learning before undertaking study.

Overall aim of the syllabus

This explains briefly the overall objective of the paper and indicates in the broadest sense the capabilities to be developed within the paper.

Main capabilities

This paper's aim is broken down into several main capabilities which divide the syllabus and study guide into discrete sections.

Relational diagram of the main capabilities

This diagram illustrates the flows and links between the main capabilities (sections) of the syllabus and should be used as an aid to planning teaching and learning in a structured way.

Syllabus rationale

This is a narrative explaining how the syllabus is structured and how the main capabilities are linked. The rationale also explains in further detail what the examination intends to assess and why.

Detailed syllabus

This shows the breakdown of the main capabilities (sections) of the syllabus into subject areas. This is the blueprint for the detailed study guide.

Approach to examining the syllabus

This section briefly explains the structure of the examination and how it is assessed.

Study Guide

This is the main document that students, tuition providers and publishers should use as the basis of their studies, instruction and materials. Examinations will be based on the detail of the study guide which comprehensively identifies what could be assessed in any examination session. The study guide is a precise reflection and breakdown of the syllabus. It is divided into sections based on the main capabilities identified in the syllabus. These sections are divided into subject areas which relate to the sub-capabilities included in the detailed syllabus. Subject areas are broken down into sub-headings which describe the detailed outcomes that could be assessed in examinations. These outcomes are described using verbs indicating what exams may require students to demonstrate, and the broad intellectual level at which these may need to be demonstrated (*see intellectual levels below).

Reading lists

ACCA has two approved publishers: BPP Professional Education and Kaplan Publishing Foulks Lynch. Both these publishers base their study texts on the detailed contents of the study guides as published by ACCA. ACCA takes no editorial responsibility for the detailed content of these study texts although ACCA examiners will annually review their content for general appropriateness and relevance in supporting effective study towards ACCA examinations. In addition ACCA examiners will recommend other text books where appropriate, which students may read in order to widen their reading beyond the approved study texts. Relevant articles will also be published in *student accountant.*

INTELLECTUAL LEVELS

The syllabus is designed to progressively broaden and deepen the knowledge, skills and professional values demonstrated by the student on their way through the qualification.

The specific capabilities within the detailed syllabuses and study guides are assessed at one of three intellectual or cognitive levels:

Level 1: Knowledge and comprehension
Level 2: Application and analysis
Level 3: Synthesis and evaluation

Very broadly, these intellectual levels relate to the three cognitive levels at which the Knowledge module, the Skills module and the Professional level are assessed.

Each subject area in the detailed study guide included in this document is given a 1, 2, or 3 superscript, denoting intellectual level, marked at the end of each relevant line. This gives an indication of the intellectual depth at which an area could be assessed within the examination. However, while level 1 broadly equates with the Knowledge module, level 2 equates to the Skills module and level 3 to the Professional level, some lower level skills can continue to be assessed as the student progresses through each module and level. This reflects that at each stage of study there will be a requirement to broaden, as well as deepen capabilities. It is also possible that occasionally some higher level capabilities may be assessed at lower levels.

LEARNING HOURS

The ACCA qualification does not prescribe or recommend any particular number of learning hours for examinations because study and learning patterns and styles vary greatly between people and organisations. This also recognises the wide diversity of personal, professional and educational circumstances in which ACCA students find themselves.

Each syllabus contains between 23 and 35 main subject area headings depending on the nature of the subject and how these areas have been broken down.

GUIDE TO EXAM STRUCTURE

The structure of examinations varies within and between modules and levels.

The Fundamentals level examinations contain 100% compulsory questions to encourage candidates to study across the breadth of each syllabus.

The Knowledge module is assessed by equivalent two-hour paper based and computer based examinations.

The Skills module examinations are all paper based three-hour papers. The structure of papers varies from ten questions in the *Corporate and Business Law* (F4) paper to four 25 mark questions in *Performance Management* (F5) and *Financial Management* (F9). Individual questions within all Skills module papers will attract between 10 and 30 marks.

The Professional level papers are all three-hour paper based examinations, all containing two sections. Section A is compulsory, but there will be some choice offered in Section B.

The Essentials module papers all have a Section A containing a major case study question with all requirements totalling 50 marks relating to this case. Section B gives students a choice of two from three 25 mark questions.

Section A of each of the Options papers contains 50-70 compulsory marks from two questions, each attracting between 25 and 40 marks. Section B will offer a choice of two from three questions totalling 30-50 marks, with each question attracting between 15 and 25 marks

GUIDE TO EXAMINATION ASSESSMENT

ACCA reserves the right to examine anything contained within the study guide at any examination session. This includes knowledge, techniques, principles, theories, and concepts as specified.

For the financial accounting, audit and assurance, law and tax papers, ACCA will publish *examinable documents* every six months to indicate exactly what regulations and legislation could potentially be assessed at the following examination session.

Knowledge of new examinable regulations will not be assessed until at least six calendar months after the last day of the month in which documents are issued or legislation is passed. The relevant cut-off date for the June examinations is 30 November of the previous year, and for the December examinations, it is 31 May of the same year.

The study guide offers more detailed guidance on the depth and level at which the examinable documents will be examined. The study guide should therefore be read in conjunction with the examinable documents list.

Syllabus

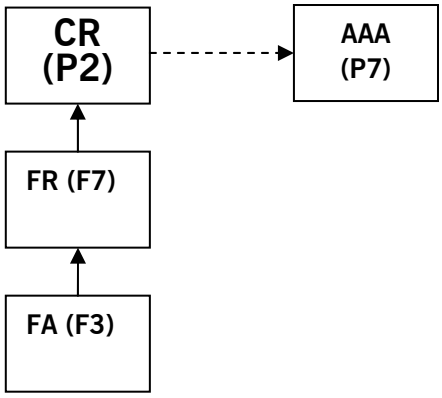

AIM

To apply knowledge, skills and exercise professional judgement in the application and evaluation of financial reporting principles and practices in a range of business contexts and situations.

MAIN CAPABILITIES

On successful completion of this paper, candidates should be able to:

- **A** Discuss the professional and ethical duties of the accountant
- **B** Evaluate the financial reporting framework
- **C** Advise on and report the financial performance of entities
- **D** Prepare the financial statements of groups of entities in accordance with relevant accounting standards
- **E** Explain reporting issues relating to specialised entities
- **F** Discuss the implications of changes in accounting regulation on financial reporting
- **G** Appraise the financial performance and position of entities
- **H** Evaluate current developments

RELATIONAL DIAGRAM OF MAIN CAPABILITIES

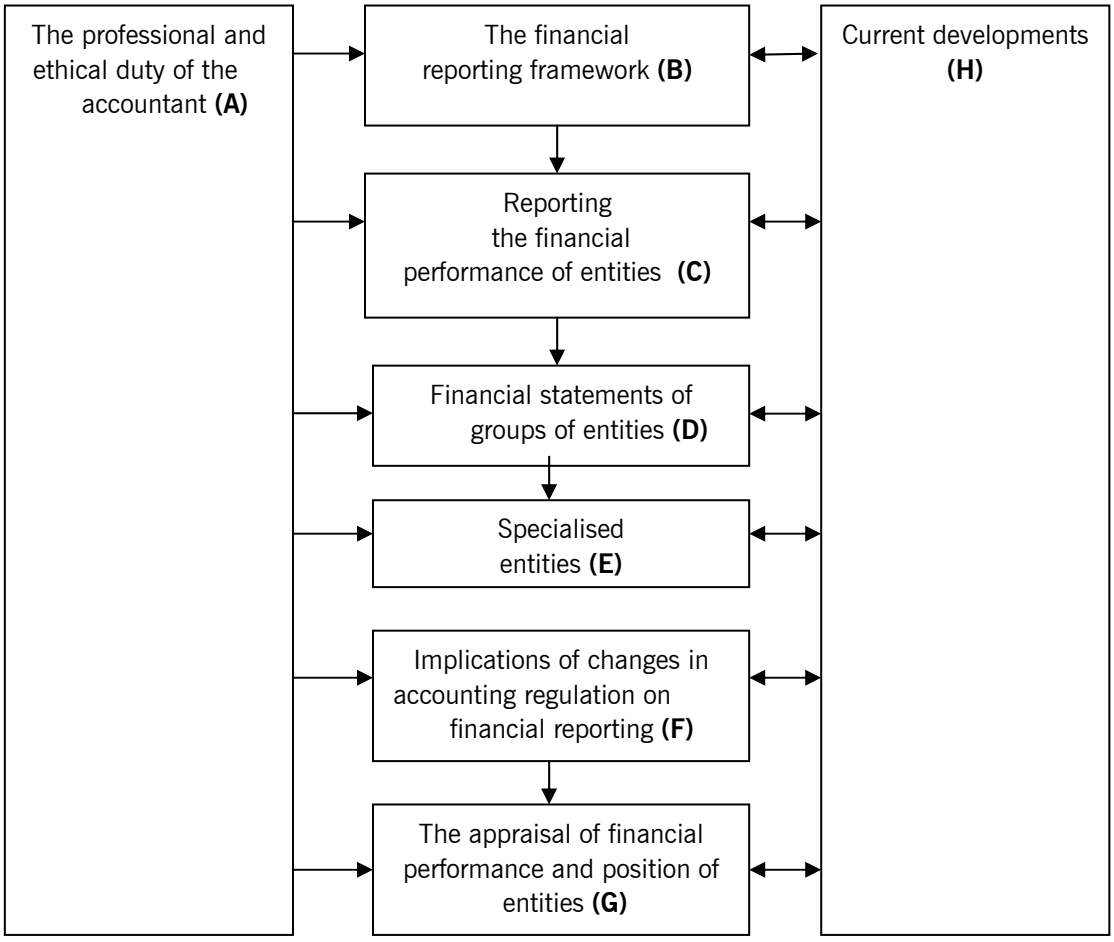

RATIONALE

The syllabus for Paper P2, *Corporate Reporting*, assumes knowledge acquired at the Fundamentals level including the core technical capabilities to prepare and analyse financial reports for single and combined entities.

The Paper P2 syllabus takes the subject into greater depth and contextualises the role of the accountant as a professional steward and adviser/analyst by initially exploring the wider professional duties and responsibilities of the accountant to the stakeholders of an organisation.

The syllabus examines the financial reporting framework within which the accountant operates and examines detailed financial reporting requirements for entities leading to the preparation of group financial reports in accordance with generally accepted accounting practice and relevant standards.

The syllabus then deals with the nature of reporting for specialised entities including not-for-profit and small and medium-sized enterprises.

The final sections of the syllabus explore – in more depth – the role of the accountant as financial analyst and adviser through the assessment of financial performance and position of entities, and the accountant's role in assessing and advising on the implications of accounting regulation on corporate reporting.

Finally, the syllabus covers the evaluation of current developments and their implications for financial reporting.

DETAILED SYLLABUS

A The professional and ethical duty of the accountant

1. Professional behaviour and compliance with accounting standards
2. Ethical requirements of corporate reporting and the consequences of unethical behaviour
3. Social responsibility

B The financial reporting framework

1. The contribution and limitations of financial statements in meeting the needs of users' and capital markets
2. The applications, strengths and weaknesses of an accounting framework
3. Critical evaluation of principles and practices

C Reporting the financial performance of entities

1. Performance reporting
2. Non-current assets
3. Financial instruments
4. Leases
5. Segment reporting
6. Employee benefits
7. Income taxes
8. Provisions, contingencies and events after the balance sheet date
9. Related parties
10. Share-based payment

D Financial statements of groups of entities

1. Group accounting including cash flow statements
2. Continuing and discontinued interests
3. Changes in group structures
4. Foreign transactions and entities

E Specialised entities

1. Financial reporting in specialised, not-for-profit and public sector entities
2. Reporting requirements of small and medium-sized entities (SMEs)

F Implications of changes in accounting regulation on financial reporting

1. The effect of changes in accounting standards on accounting systems

2. Proposed changes to accounting standards

G The appraisal of financial performance and position of entities

1. The creation of suitable accounting policies

2. Analysis and interpretation of financial information and measurement of performance

H Current developments

1. Environmental and social reporting

2. Convergence between national and international reporting standards

3. Comparison of national reporting requirements

4. Current reporting issues

APPROACH TO EXAMINING THE SYLLABUS

The syllabus is assessed by a three-hour paper-based examination. It examines professional competences within the corporate reporting environment.

Students will be examined on concepts, theories, and principles, and on their ability to question and comment on proposed accounting treatments.

Students should be capable of relating professional issues to relevant concepts and practical situations. The evaluation of alternative accounting practices and the identification and prioritisation of issues will be a key element of the paper. Professional and ethical judgement will need to be exercised, together with the integration of technical knowledge when addressing corporate reporting issues in a business context.

Global issues will be addressed via the current issues questions on the paper. Students will be required to adopt either a stakeholder or an external focus in answering questions and to demonstrate personal skills such as problem solving, dealing with information and decision making.
The paper also deals with specific professional knowledge appropriate to the preparation and presentation of consolidated and other financial statements from accounting data, to conform with accounting standards.

The paper will comprise two sections.

Section A Compulsory question	50 marks
Section B 2 from 3 questions of 25 marks each	50 marks
	100 marks

Section A will consist of one scenario based question worth 50 marks. It will deal with the preparation of consolidated financial statements including group cash flow statements and with issues in financial reporting.
Students will be required to answer two out of three questions in Section B, which will normally comprise two questions which will be scenario or case-study based and one question which will be an essay. Section B could deal with any aspects of the syllabus.

Study Guide

A THE PROFESSIONAL AND ETHICAL DUTIES OF THE ACCOUNTANT

1. Professional behaviour and compliance with accounting standards

a) Appraise and discuss the ethical and professional issues in advising on corporate reporting.[3]

b) Assess the relevance and importance of ethical and professional issues in complying with accounting standards.[3]

2. Ethical requirements of corporate reporting and the consequences of unethical behaviour

a) Appraise the potential ethical implications of professional and managerial decisions in the preparation of corporate reports.[3]

b) Assess the consequences of not upholding ethical principles in the preparation of corporate reports.[3]

3. Social Responsibility

a) Discuss the increased demand for transparency in corporate reports, and the emergence of non-financial reporting standards.[3]

b) Discuss the progress towards a framework for environmental and sustainability reporting.[3]

B THE FINANCIAL REPORTING FRAMEWORK

1. The contribution and limitations of financial statements in meeting users' and capital markets' needs

a) Evaluate the consistency and clarity of corporate reports.[3]

b) Assess the insight into financial and operational risks provided by corporate reports.[3]

c) Discuss the usefulness of corporate reports in making investment decisions.[3]

2. The applications, strengths and weaknesses of an accounting framework

a) Evaluate the "balance sheet" and "fair value" models adopted by standard setters.[3]

b) Discuss the use of an accounting framework in underpinning the production of accounting standards.[3]

c) Assess the success of such a framework in introducing rigorous and consistent accounting standards.[3]

3. Critical evaluation of principles and practices

a) Identify the relationship between accounting theory and practice.[2]

b) Critically evaluate accounting principles and practices used in corporate reporting.[3]

C REPORTING THE FINANCIAL PERFORMANCE OF ENTITIES

1. Performance reporting

a) Prepare reports relating to corporate performance for external stakeholders.[3]

b) Evaluate proposed changes to reporting financial performance.[3]

2. Non-current assets

a) Apply and discuss the timing of the recognition of non-current assets and the determination of their carrying amounts including impairments and revaluations.[3]

b) Apply and discuss the treatment of non-current assets held for sale.[3]

c) Apply and discuss the accounting treatment of investment properties including classification, recognition and measurement issues.[3]

d) Apply and discuss the accounting treatment of intangible assets including the criteria for recognition and measurement subsequent to acquisition and classification.[3]

3. Financial Instruments

a) Apply and discuss the recognition and de-recognition of financial assets and financial liabilities.[2]

b) Apply and discuss the classification of financial assets and financial liabilities and their measurement.[2]

c) Apply and discuss the treatment of gains and losses arising on financial assets and financial liabilities.[2]

d) Apply and discuss the treatment of impairments of financial assets.[2]

e) Account for derivative financial instruments, and simple embedded derivatives.[2]

f) Outline the principles of hedge accounting and account for fair value hedges and cash flow hedges including hedge effectiveness.[2]

4. Leases

a) Apply and discuss the classification of leases and accounting for leases by lessors and lessees.[3]

b) Account for and discuss sale and leaseback transactions.[3]

5. Segment Reporting

a) Determine business and geographical segments, and reportable segments.[3]

b) Specify and discuss the nature of segment information to be disclosed.[3]

6. Employee Benefits

a) Apply and discuss the accounting treatment of defined contribution and defined benefit plans.[3]

b) Account for gains and losses on settlements and curtailments.[2]

c) Account for the "Asset Ceiling" test and the reporting of actuarial gains and losses.[2]

7. Income taxes

a) Apply and discuss the recognition and measurement of deferred tax liabilities and deferred tax assets including the exceptions to recognition.[3]

b) Determine the recognition of tax expense or income and its inclusion in the financial statements.[3]

8. Provisions, contingencies and events after the balance sheet date

a) Apply and discuss the recognition, derecognition and measurement of provisions, contingent liabilities and contingent assets including environmental provisions.[3]

b) Calculate and discuss restructuring provisions.[3]

c) Apply and discuss the accounting for events after the balance sheet date.[3]

d) Determine and report going concern issues arising after the balance sheet date.[3]

9. Related parties

a) Determine the parties considered to be related to an entity.[3]

b) Identify the implications of related party relationships and the need for disclosure.[3]

10. Share based payment

a) Apply and discuss the recognition and measurement criteria for share-based payment transactions.[3]

b) Account for modifications, cancellations and settlements of share based payment transactions.[2]

D FINANCIAL STATEMENTS OF GROUPS OF ENTITIES

1. Group accounting including cash flow statements

a) Apply the method of accounting for business combinations including complex group structures.[3]

b) Apply the principles in determining the cost of a business combination.[3]

c) Apply the recognition and measurement criteria for identifiable acquired assets and liabilities and goodwill including step acquisitions.[3]

d) Apply and discuss the criteria used to identify a subsidiary and an associate.[3]

e) Determine and apply appropriate procedures to be used in preparing group financial statements.[3]

f) Apply the equity method of accounting for associates.[3]

g) Outline and apply the key definitions and accounting methods which relate to interests in joint ventures.[3]

h) Prepare and discuss group cash flow statements.[3]

2. Continuing and discontinued interests

a) Prepare group financial statements where activities have been discontinued, or have been acquired or disposed of in the period.[3]

b) Apply and discuss the treatment of a subsidiary which has been acquired exclusively with a view to subsequent disposal.[3]

3. Changes in group structures

a) Discuss the reasons behind a group reorganisation.[3]

b) Evaluate and assess the principal terms of a proposed group reorganisation.[3]

4. Foreign transactions and entities

a) Outline and apply the translation of foreign currency amounts and transactions into the functional currency and the presentational currency.[3]

b) Account for the consolidation of foreign operations and their disposal.[2]

c) Describe the principal objectives of establishing a standard for enterprises reporting in the currency of a hyper inflationary economy.[1]

E SPECIALISED ENTITIES

1. Financial reporting in specialised, not-for-profit and public sector entities

a) Apply knowledge from the syllabus to straightforward transactions and events arising in specialised, not-for-profit, and public sector entities.[3]

2. Reporting requirements of small and medium entities (SMEs)

a) Outline the principal considerations in developing a set of accounting standards for SMEs.[3]

b) Discuss solutions to the problem of differential financial reporting.[3]

F IMPLICATIONS OF CHANGES IN ACCOUNTING REGULATION ON FINANCIAL REPORTING

1. The effect of changes in accounting standards on accounting systems

a) Apply and discuss the accounting implications of the first time adoption of a body of new accounting standards.[3]

b) Outline the issues in implementing a change to new accounting standards including organisational, behavioural, and procedural changes within the entity.[3]

2. Proposed changes to accounting standards

a) Identify issues and deficiencies which have led to a proposed change to an accounting standard.[2]

b) Apply and discuss the implications of a proposed change to an accounting standard on the performance and balance sheet of an entity.[2]

G THE APPRAISAL OF FINANCIAL PERFORMANCE AND POSITION OF ENTITIES

1. The creation of suitable accounting policies

a) Develop accounting policies for an entity which meet the entity's reporting requirements.[3]

b) Identify accounting treatments adopted in financial statements and assess their suitability and acceptability.[3]

2. Analysis and interpretation of financial information and measurement of performance

a) Select and calculate relevant indicators of financial and non-financial performance.[3]

b) Identify and evaluate significant features and issues in financial statements.[3]

c) Highlight inconsistencies in financial information through analysis and application of knowledge.[3]

d) Make inferences from the analysis of information taking into account the limitation of the information, the analytical methods used and the business environment in which the entity operates.[3]

H CURRENT DEVELOPMENTS

1. Environmental and social reporting

a) Appraise the impact of environmental, social, and ethical factors on performance measurement.[3]

b) Evaluate current reporting requirements in the area.[3]

c) Discuss why entities might include disclosures relating to the environment and society.[3]

2. Convergence between national and international reporting standards

a) Evaluate the implications of worldwide convergence with International Financial Reporting Standards.[3]

b) Discuss the implementation issues arising from the convergence process.[3]

3. Comparison of national reporting requirements

a) Identify the reasons for major differences in accounting practices, including culture.[2]

b) Discuss the influence of national regulators on international financial reporting.[2]

4. Current reporting issues

a) Discuss current issues in corporate reporting.[3]

READING LIST

ACCA's approved publishers:

BPP Professional Education
Contact number: +44(0)20 8740 2222
Website: www.bpp.com/acca

Kaplan Publishing Foulks Lynch
Contact number: +44(0)118 989 0629
Website: www.kaplanfoulkslynch.com

Additional reading:

Accountancy Tuition Centre (ATC) International
Contact number: +44(0)141 880 6469
Website: www.ptc-global.com

'International GAAP 2006' -Ernst and Young LexisNexis

'International Financial Reporting Standards-Workbook and Guide' Abbas Ali Mirza, Graham J Holt, Magnus Orrell. Wiley (2006)