Audit and Assurance (INT) (F8)

This syllabus and study guide is designed to help with planning study and to provide detailed information on what could be assessed in any examination session.

THE STRUCTURE OF THE SYLLABUS AND STUDY GUIDE

Relational diagram of paper with other papers

This diagram shows direct and indirect links between this paper and other papers preceding or following it. Some papers are directly underpinned by other papers such as Advanced Performance Management by Performance Management. These links are shown as solid line arrows. Other papers only have indirect relationships with each other such as links existing between the accounting and auditing papers. The links between these are shown as dotted line arrows. This diagram indicates where you are expected to have underpinning knowledge and where it would be useful to review previous learning before undertaking study.

Overall aim of the syllabus

This explains briefly the overall objective of the paper and indicates in the broadest sense the capabilities to be developed within the paper.

Main capabilities

This paper's aim is broken down into several main capabilities which divide the syllabus and study guide into discrete sections.

Relational diagram of the main capabilities

This diagram illustrates the flows and links between the main capabilities (sections) of the syllabus and should be used as an aid to planning teaching and learning in a structured way.

Syllabus rationale

This is a narrative explaining how the syllabus is structured and how the main capabilities are linked. The rationale also explains in further detail what the examination intends to assess and why.

Detailed syllabus

This shows the breakdown of the main capabilities (sections) of the syllabus into subject areas. This is the blueprint for the detailed study guide.

Approach to examining the syllabus

This section briefly explains the structure of the examination and how it is assessed.

Study Guide

This is the main document that students, tuition providers and publishers should use as the basis of their studies, instruction and materials. Examinations will be based on the detail of the study guide which comprehensively identifies what could be assessed in any examination session. The study guide is a precise reflection and breakdown of the syllabus. It is divided into sections based on the main capabilities identified in the syllabus. These sections are divided into subject areas which relate to the sub-capabilities included in the detailed syllabus. Subject areas are broken down into sub-headings which describe the detailed outcomes that could be assessed in examinations. These outcomes are described using verbs indicating what exams may require students to demonstrate, and the broad intellectual level at which these may need to be demonstrated (*see intellectual levels below).

Reading lists

ACCA has two approved publishers: BPP Professional Education and Kaplan Publishing Foulks Lynch. Both these publishers base their study texts on the detailed contents of the study guides as published by ACCA. ACCA takes no editorial responsibility for the detailed content of these study texts although ACCA examiners will annually review their content for general appropriateness and relevance in supporting effective study towards ACCA examinations. In addition ACCA examiners will recommend other text books where appropriate, which students may read in order to widen their reading beyond the approved study texts. Relevant articles will also be published in *student accountant.*

INTELLECTUAL LEVELS

The syllabus is designed to progressively broaden and deepen the knowledge, skills and professional values demonstrated by the student on their way through the qualification.

The specific capabilities within the detailed syllabuses and study guides are assessed at one of three intellectual or cognitive levels:

Level 1: Knowledge and comprehension
Level 2: Application and analysis
Level 3: Synthesis and evaluation

Very broadly, these intellectual levels relate to the three cognitive levels at which the Knowledge module, the Skills module and the Professional level are assessed.

Each subject area in the detailed study guide included in this document is given a 1, 2, or 3 superscript, denoting intellectual level, marked at the end of each relevant line. This gives an indication of the intellectual depth at which an area could be assessed within the examination. However, while level 1 broadly equates with the Knowledge module, level 2 equates to the Skills module and level 3 to the Professional level, some lower level skills can continue to be assessed as the student progresses through each module and level. This reflects that at each stage of study there will be a requirement to broaden, as well as deepen capabilities. It is also possible that occasionally some higher level capabilities may be assessed at lower levels.

LEARNING HOURS

The ACCA qualification does not prescribe or recommend any particular number of learning hours for examinations because study and learning patterns and styles vary greatly between people and organisations. This also recognises the wide diversity of personal, professional and educational circumstances in which ACCA students find themselves.

Each syllabus contains between 23 and 35 main subject area headings depending on the nature of the subject and how these areas have been broken down.

GUIDE TO EXAM STRUCTURE

The structure of examinations varies within and between modules and levels.

The Fundamentals level examinations contain 100% compulsory questions to encourage candidates to study across the breadth of each syllabus.

The Knowledge module is assessed by equivalent two-hour paper based and computer based examinations.

The Skills module examinations are all paper based three-hour papers. The structure of papers varies from ten questions in the *Corporate and Business Law* (F4) paper to four 25 mark questions in *Performance Management* (F5) and *Financial Management* (F9). Individual questions within all Skills module papers will attract between 10 and 30 marks.

The Professional level papers are all three-hour paper based examinations, all containing two sections. Section A is compulsory, but there will be some choice offered in Section B.

The Essentials module papers all have a Section A containing a major case study question with all requirements totalling 50 marks relating to this case. Section B gives students a choice of two from three 25 mark questions.

Section A of each of the Options papers contains 50-70 compulsory marks from two questions, each attracting between 25 and 40 marks. Section B will offer a choice of two from three questions totalling 30-50 marks, with each question attracting between 15 and 25 marks

GUIDE TO EXAMINATION ASSESSMENT

ACCA reserves the right to examine anything contained within the study guide at any examination session. This includes knowledge, techniques, principles, theories, and concepts as specified.

For the financial accounting, audit and assurance, law and tax papers, ACCA will publish *examinable documents* every six months to indicate exactly what regulations and legislation could potentially be assessed at the following examination session.

Knowledge of new examinable regulations will not be assessed until at least six calendar months after the last day of the month in which documents are issued or legislation is passed. The relevant cut-off date for the June examinations is 30 November of the previous year, and for the December examinations, it is 31 May of the same year.

The study guide offers more detailed guidance on the depth and level at which the examinable documents will be examined. The study guide should therefore be read in conjunction with the examinable documents list.

Syllabus

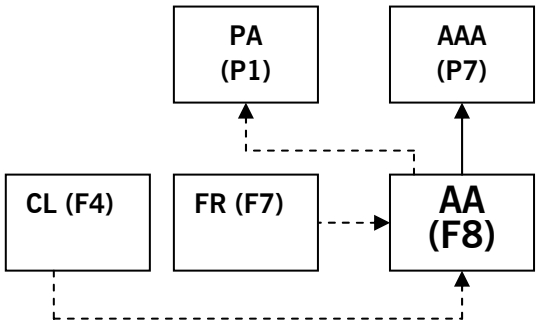

AIM

To develop knowledge and understanding of the process of carrying out the assurance engagement and its application in the context of the professional regulatory framework.

MAIN CAPABILITIES

On successful completion of this paper, candidates should be able to:

A Explain the nature, purpose and scope of assurance engagements including the role of the external audit and its regulatory and ethical framework

B Explain the nature of internal audit and describe its role as part of overall performance management and its relationship with the external audit

C Demonstrate how the auditor obtains an understanding of the entity and its environment, assesses the risk of material misstatement (whether arising from fraud or other irregularities) and plans an audit of financial statements

D Describe and evaluate information systems and internal controls to identify and communicate control risks and their potential consequences, making appropriate recommendations

E Identify and describe the work and evidence required to meet the objectives of audit engagements and the application of the International Standards on Auditing

F Evaluate findings and modify the audit plan as necessary

G Explain how the conclusions from audit work are reflected in different types of audit report, explain the elements of each type of report.

RELATIONAL DIAGRAM OF MAIN CAPABILITIES

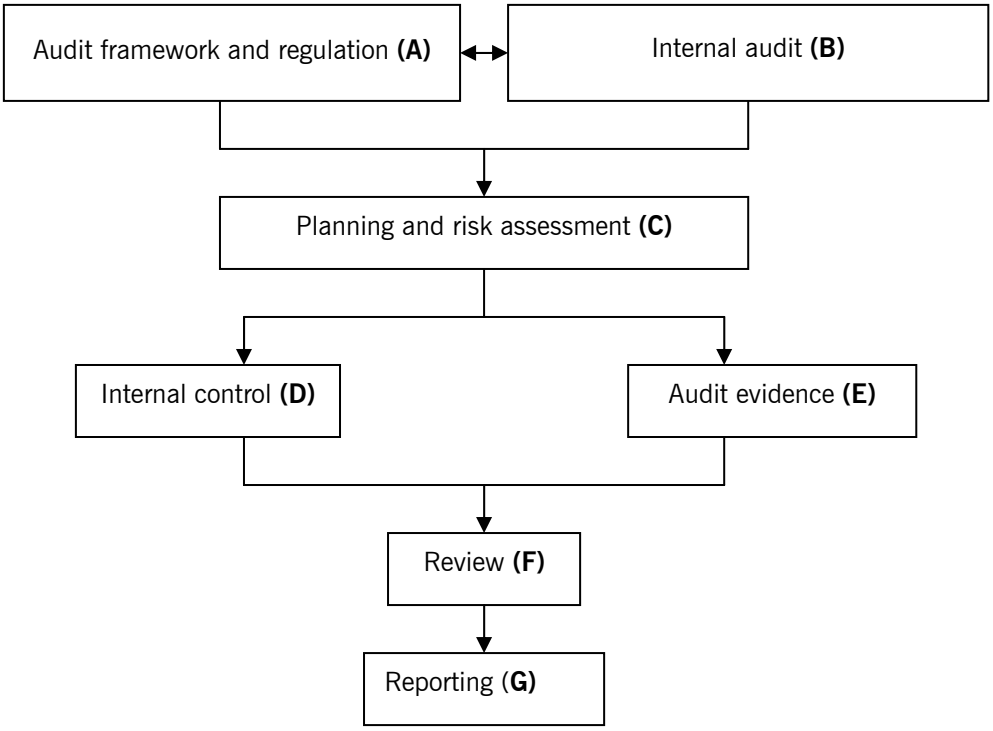

RATIONALE

The Audit and Assurance syllabus is essentially divided into seven areas. The syllabus starts with the nature, purpose and scope of assurance engagements, including the statutory audit, its regulatory environment, and introduces professional ethics relating to audit and assurance. It then leads into internal audit, including the scope of internal audit as well as the differences between internal audit and external audit. The syllabus then covers a range of areas relating to an audit of financial statements. These include planning and risk assessment, evaluating internal controls, audit evidence, and a review of the financial statements. The final section then deals with reporting, including statutory audit reports, management reports, and internal audit reports.

DETAILED SYLLABUS

A. Audit Framework and Regulation

1. The concept of audit and other assurance engagements
2. Statutory audits
3. The regulatory environment and corporate governance
4. Professional ethics and ACCA's Code of Ethics and Conduct

B. Internal audit

1. Internal audit and corporate governance
2. Differences between external and internal audit
3. The scope of the internal audit function
4. Outsourcing the internal audit department
5. Internal audit assignments

C. Planning and risk assessment

1. Objective and general principles
2. Understanding the entity and knowledge of the business
3. Assessing the risks of material misstatement and fraud
4. Analytical procedures
5. Planning an audit
6. Audit documentation
7. The work of others

D. Internal control

1. Internal control systems
2. The use of internal control systems by auditors
3. Transaction cycles
4. Tests of control
5. The evaluation of internal control components
6. Communication on internal control

E. Audit evidence

1. The use of assertions by auditors
2. Audit procedures
3. The audit of specific items
4. Audit sampling and other means of testing
5. Computer-assisted audit techniques
6. Not-for-profit organisations

F. Review

1. Subsequent events
2. Going concern
3. Management representations
4. Audit finalisation and the final review

G. Reporting

1. Audit reports

2. Reports to management

3. Internal audit reports

APPROACH TO EXAMINING THE SYLLABUS

The syllabus is assessed by a three-hour paper-based examination, consisting of five compulsory questions. The bulk of the questions will be discursive but some questions involving computational elements will be set from time to time.

The questions will cover all areas of the syllabus.

Question 1 will be a scenario-based question worth 30 marks. Question 2 will be a knowledge-based question worth 10 marks. Questions 3, 4 and 5 will be worth 20 marks each.

Study Guide

A AUDIT FRAMEWORK AND REGULATION

1. The concept of audit and other assurance engagements

a) Identify and describe the objective and general principles of external audit engagements.[2]

b) Explain the nature and development of audit and other assurance engagements.[1]

c) Discuss the concepts of accountability, stewardship and agency.[2]

d) Discuss the concepts of materiality, true and fair presentation and reasonable assurance.[2]

e) Explain reporting as a means of communication to different stakeholders.[1]

f) Explain the level of assurance provided by audit and other review assignments.[1]

2. Statutory audits

a) Describe the regulatory environment within which statutory audits take place.[1]

b) Discuss the reasons and mechanisms for the regulation of auditors.[2]

c) Explain the statutory regulations governing the appointment, removal and resignation of auditors.[1]

d) Discuss the types of opinion provided in statutory audits.[2]

e) State the objectives and principle activities of statutory audit and assess its value (e.g. in assisting management to reduce risk and improve performance).[1]

f) Describe the limitations of statutory audits.[1]

3. The regulatory environment and corporate governance

a) Explain the development and status of International Standards on Auditing.[1]

b) Explain the relationship between International Standards on Auditing and national standards.[1]

c) Discuss the objective, relevance and importance of corporate governance.[2]

d) Discuss the need for auditors to communicate with those charged with governance.[2]

e) Discuss the provisions of international codes of corporate governance (such as OECD) that are most relevant to auditors.[2]

f) Describe good corporate governance requirements relating to directors' responsibilities (e.g. for risk management and internal control) and the reporting responsibilities of auditors.[1]

g) Analyse the structure and roles of audit committees and discuss their drawbacks and limitations.[2]

h) Explain the importance of internal control and risk management.[1]

i) Compare the responsibilities of management and auditors for the design and operation of systems and controls.[2]

4. Professional ethics and ACCA's Code of Ethics and Conduct

a) Define and apply the fundamental principles of professional ethics of integrity, objectivity, professional competence and due care, confidentiality and professional behaviour.[2]

b) Define and apply the conceptual framework.[2]

c) Discuss the sources of, and enforcement mechanisms associated with, ACCA's Code of Ethics and Conduct.[2]

d) Discuss the requirements of professional ethics and other requirements in relation to the acceptance of new audit engagements.[2]

e) Discuss the process by which an auditor obtains an audit engagement.[2]

f) Explain the importance of engagement letters and state their contents.[1]

B INTERNAL AUDIT

1. Internal audit and corporate governance

a) Discuss the factors to be taken into account when assessing the need for internal audit.[2]

b) Discuss the elements of best practice in the structure and operations of internal audit with reference to appropriate international codes of corporate governance.[2]

2. Differences between external and internal audit

a) Compare and contrast the role of external and internal audit regarding audit planning and the collection of audit evidence.[2]

b) Compare and contrast the types of report provided by internal and external audit.[2]

3. The scope of the internal audit function

a) Discuss the scope of internal audit and the limitations of the internal audit function.[2]

b) Explain the types of audit report provided in internal audit assignments.[1]

c) Discuss the responsibilities of internal and external auditors for the prevention and detection of fraud and error.[2]

4. Outsourcing the internal audit department

a) Explain the advantages and disadvantages of outsourcing internal audit.[1]

5. Internal audit assignments

a) Discuss the nature and purpose of internal audit assignments including value for money, IT, best value and financial.[2]

b) Discuss the nature and purpose of operational internal audit assignments including procurement, marketing, treasury and human resources management.[2]

C PLANNING AND RISK ASSESSMENT

1. Objective and general principles

a) Identify and describe the need to plan and perform audits with an attitude of professional scepticism.[2]

b) Identify and describe engagement risks affecting the audit of an entity.[1]

c) Explain the components of audit risk.[1]

d) Compare and contrast risk based, procedural and other approaches to audit work.[2]

e) Discuss the importance of risk analysis.[2]

f) Describe the use of information technology in risk analysis.[1]

2. Understanding the entity and knowledge of the business

a) Explain how auditors obtain an initial understanding of the entity and knowledge of its business environment.[2]

3. Assessing the risks of material misstatement and fraud

a) Define and explain the concepts of materiality and tolerable error.[2]

b) Compute indicative materiality levels from financial information.[2]

c) Discuss the effect of fraud and misstatements on the audit strategy and extent of audit work.[2]

4. Analytical procedures

a) Describe and explain the nature and purpose of analytical procedures in planning.[2]

b) Compute and interpret key ratios used in analytical procedures.[2]

5. Planning an audit

a) Identify and explain the need for planning an audit.[2]

b) Identify and describe the contents of the overall audit strategy and audit plan.[2]

c) Explain and describe the relationship between the overall audit strategy and the audit plan.[2]

d) Develop and document an audit plan.[2]

e) Explain the difference between interim and final audit.[1]

6. Audit documentation

a) Explain the need for and the importance of audit documentation. [1]

b) Describe and prepare working papers and supporting documentation.[2]

c) Explain the procedures to ensure safe custody and retention of working papers.[1]

7. The work of others

a) Discuss the extent to which auditors are able to rely on the work of experts.[2]

b) Discuss the extent to which external auditors are able to rely on the work of internal audit.[2]

c) Discuss the audit considerations relating to entities using service organisations.[2]

d) Discuss why auditors rely on the work of others.[2]

e) Explain the extent to which reference to the work of others can be made in audit reports.[1]

D INTERNAL CONTROL

The following transaction cycles and account balances are relevant to this capability:

- revenue,
- purchases,
- inventory,
- revenue and capital expenditure,
- payroll,
- bank and cash.

1. Internal control systems

a) Explain why an auditor needs to obtain an understanding of internal control activities relevant to the audit.[1]

b) Describe and explain the key components of an internal control system.[1]

c) Identify and describe the important elements of internal control including the control environment and management control activities. [1]

d) Discuss the difference between tests of control and substantive procedures. [2]

2. The use of internal control systems by auditors

a) Explain the importance of internal control to auditors.[1]

b) Explain how auditors identify weaknesses in internal control systems and how those weaknesses limit the extent of auditors' reliance on those systems.[2]

3. Transaction cycles

a) Explain, analyse and provide examples of internal control procedures and control activities.[2]

b) Provide examples of computer system controls.[2]

4. Tests of control

a) Explain and tabulate tests of control suitable for inclusion in audit working papers.[2]

b) List examples of application controls and general IT controls.[2]

5. The evaluation of internal control components

a) Analyse the limitations of internal control components in the context of fraud and error.[2]

b) Explain the need to modify the audit strategy and audit plan following the results of tests of control.[1]

c) Identify and explain management's risk assessment process with reference to internal control components.[1]

6. Communication on internal control

a) Discuss and provide examples of how the reporting of internal control weaknesses and recommendations to overcome those weaknesses are provided to management.[2]

E AUDIT EVIDENCE

1. The use of assertions by auditors

a) Explain the assertions contained in the financial statements.[2]

b) Explain the principles and objectives of transaction testing, account balance testing and disclosure testing.[1]

c) Explain the use of assertions in obtaining audit evidence.[2]

2. Audit procedures

a) Discuss the sources and relative merits of the different types of evidence available.[2]

b) Discuss and provide examples of how analytical procedures are used as substantive procedures.[2]

c) Discuss the problems associated with the audit and review of accounting estimates.[2]

d) Describe why smaller entities may have different control environments and describe the types of evidence likely to be available in smaller entities.[1]

e) Discuss the quality of evidence obtained.[2]

3. The audit of specific items

For each of the account balances stated in this sub-capability:

- explain the purpose of substantive procedures in relation to financial statement assertions,
- explain the substantive procedures used in auditing each balance, and
- tabulate those substantive procedures in a work program.

a) Receivables: [2]
   i) direct confirmation of accounts receivable
   ii) other evidence in relation to receivables and prepayments, and
   iii) the related income statement entries.

b) Inventory: [2]
   i) inventory counting procedures in relation to year-end and continuous inventory systems
   ii) cut-off
   iii) auditor's attendance at inventory counting
   iv) direct confirmation of inventory held by third parties,
   v) other evidence in relation to inventory.

c) Payables and accruals: [2]
   i) supplier statement reconciliations and direct confirmation of accounts payable,
   ii) obtain evidence in relation to payables and accruals, and
   iii) the related income statement entries.

d) Bank and cash: [2]
   i) bank confirmation reports used in obtaining evidence in relation to bank and cash
   ii) other evidence in relation to bank and cash, and
   iii) the related income statement entries.

e) Tangible non-current assets and long-term liabilities: [2]
   i) evidence in relation to non-current assets and
   ii) non-current liabilities and
   iii) the related income statement entries.

4. Audit sampling and other means of testing

a) Define audit sampling and explain the need for sampling.[1]

b) Identify and discuss the differences between statistical and non-statistical sampling.[2]

c) Discuss and provide relevant examples of, the application of the basic principles of statistical sampling and other selective testing procedures. [2]

d) Discuss the results of statistical sampling, including consideration of whether additional testing is required.[2]

5. Computer-assisted audit techniques

a) Explain the use of computer-assisted audit techniques in the context of an audit.[1]

b) Discuss and provide relevant examples of the use of test data and audit software for the transaction cycles and balances mentioned in sub-capability 3.[2]

c) Discuss the use of computers in relation to the administration of the audit.[2]

6. Not-for-profit organisations

a) Apply audit techniques to small not-for-profit organisations.[2]

b) Explain how the audit of small not-for-profit organisations differs from the audit of for-profit organisations.[1]

F REVIEW

1. Subsequent events

a) Explain the purpose of a subsequent events review.[1]

b) Discuss the procedures to be undertaken in performing a subsequent events review.[2]

2. Going concern

a) Define and discuss the significance of the concept of going concern.[2]

b) Explain the importance of and the need for going concern reviews.[2]

c) Explain the respective responsibilities of auditors and management regarding going concern.[1]

d) Discuss the procedures to be applied in performing going concern reviews.[2]

e) Discuss the disclosure requirements in relation to going concern issues.[2]

f) Discuss the reporting implications of the findings of going concern reviews.[2]

3. Management representations

a) Explain the purpose of and procedure for obtaining management representations.[2]

b) Discuss the quality and reliability of management representations as audit evidence.[2]

c) Discuss the circumstances where management representations are necessary and the matters on which representations are commonly obtained. [2]

4. Audit finalisation and the final review

a) Discuss the importance of the overall review of evidence obtained.[2]

b) Explain the significance of unadjusted differences.[1]

G REPORTING

1. Audit reports

a) Describe and analyse the format and content of unmodified audit reports.[2]

b) Describe and analyse the format and content of modified audit reports.[2]

2. Reports to management

a) Identify and analyse internal control and system weaknesses and their potential effects and make appropriate recommendations to management.[2]

3. Internal audit reports

a) Describe and explain the format and content of internal audit review reports and other reports dealing with the enhancement of performance.[1]

b) Explain the process for producing an internal audit report.[1]

READING LIST

ACCA's approved publishers:

BPP Professional Education
Contact number: +44(0)20 8740 2222
Website: www.bpp.com/acca

Kaplan Publishing Foulks Lynch
Contact number: +44(0)118 989 0629
Website: www.kaplanfoulkslynch.com

Additional reading:

Accountancy Tuition Centre (ATC) International
Contact number: +44(0)141 880 6469
Website: www.ptc-global.com

student accountant
http://www.ifac.org