Management Accounting (F2)

This syllabus and study guide is designed to help with planning study and to provide detailed information on what could be assessed in any examination session.

THE STRUCTURE OF THE SYLLABUS AND STUDY GUIDE

Relational diagram of paper with other papers

This diagram shows direct and indirect links between this paper and other papers preceding or following it. Some papers are directly underpinned by other papers such as Advanced Performance Management by Performance Management. These links are shown as solid line arrows. Other papers only have indirect relationships with each other such as links existing between the accounting and auditing papers. The links between these are shown as dotted line arrows. This diagram indicates where you are expected to have underpinning knowledge and where it would be useful to review previous learning before undertaking study.

Overall aim of the syllabus

This explains briefly the overall objective of the paper and indicates in the broadest sense the capabilities to be developed within the paper.

Main capabilities

This paper's aim is broken down into several main capabilities which divide the syllabus and study guide into discrete sections.

Relational diagram of the main capabilities

This diagram illustrates the flows and links between the main capabilities (sections) of the syllabus and should be used as an aid to planning teaching and learning in a structured way.

Syllabus rationale

This is a narrative explaining how the syllabus is structured and how the main capabilities are linked. The rationale also explains in further detail what the examination intends to assess and why.

Detailed syllabus

This shows the breakdown of the main capabilities (sections) of the syllabus into subject areas. This is the blueprint for the detailed study guide.

Approach to examining the syllabus

This section briefly explains the structure of the examination and how it is assessed.

Study Guide

This is the main document that students, tuition providers and publishers should use as the basis of their studies, instruction and materials.
Examinations will be based on the detail of the study guide which comprehensively identifies what could be assessed in any examination session.
The study guide is a precise reflection and breakdown of the syllabus. It is divided into sections based on the main capabilities identified in the syllabus. These sections are divided into subject areas which relate to the sub-capabilities included in the detailed syllabus. Subject areas are broken down into sub-headings which describe the detailed outcomes that could be assessed in examinations. These outcomes are described using verbs indicating what exams may require students to demonstrate, and the broad intellectual level at which these may need to be demonstrated (*see intellectual levels below).

Reading lists

ACCA has two approved publishers: BPP Professional Education and Kaplan Publishing Foulks Lynch. Both these publishers base their study texts on the detailed contents of the study guides as published by ACCA. ACCA takes no editorial responsibility for the detailed content of these study texts although ACCA examiners will annually review their content for general appropriateness and relevance in supporting effective study towards ACCA examinations.
In addition ACCA examiners will recommend other text books where appropriate, which students may read in order to widen their reading beyond the approved study texts. Relevant articles will also be published in *student accountant.*

INTELLECTUAL LEVELS

The syllabus is designed to progressively broaden and deepen the knowledge, skills and professional values demonstrated by the student on their way through the qualification.

The specific capabilities within the detailed syllabuses and study guides are assessed at one of three intellectual or cognitive levels:

Level 1: Knowledge and comprehension
Level 2: Application and analysis
Level 3: Synthesis and evaluation

Very broadly, these intellectual levels relate to the three cognitive levels at which the Knowledge module, the Skills module and the Professional level are assessed.

Each subject area in the detailed study guide included in this document is given a 1, 2, or 3 superscript, denoting intellectual level, marked at the end of each relevant line. This gives an indication of the intellectual depth at which an area could be assessed within the examination. However, while level 1 broadly equates with the Knowledge module, level 2 equates to the Skills module and level 3 to the Professional level, some lower level skills can continue to be assessed as the student progresses through each module and level. This reflects that at each stage of study there will be a requirement to broaden, as well as deepen capabilities. It is also possible that occasionally some higher level capabilities may be assessed at lower levels.

LEARNING HOURS

The ACCA qualification does not prescribe or recommend any particular number of learning hours for examinations because study and learning patterns and styles vary greatly between people and organisations. This also recognises the wide diversity of personal, professional and educational circumstances in which ACCA students find themselves.

Each syllabus contains between 23 and 35 main subject area headings depending on the nature of the subject and how these areas have been broken down.

GUIDE TO EXAM STRUCTURE

The structure of examinations varies within and between modules and levels.

The Fundamentals level examinations contain 100% compulsory questions to encourage candidates to study across the breadth of each syllabus.

The Knowledge module is assessed by equivalent two-hour paper based and computer based examinations.

The Skills module examinations are all paper based three-hour papers. The structure of papers varies from ten questions in the *Corporate and Business Law* (F4) paper to four 25 mark questions in *Performance Management* (F5) and *Financial Management* (F9). Individual questions within all Skills module papers will attract between 10 and 30 marks.

The Professional level papers are all three-hour paper based examinations, all containing two sections. Section A is compulsory, but there will be some choice offered in Section B.

The Essentials module papers all have a Section A containing a major case study question with all requirements totalling 50 marks relating to this case. Section B gives students a choice of two from three 25 mark questions.

Section A of each of the Options papers contains 50-70 compulsory marks from two questions, each attracting between 25 and 40 marks. Section B will offer a choice of two from three questions totalling 30-50 marks, with each question attracting between 15 and 25 marks

GUIDE TO EXAMINATION ASSESSMENT

ACCA reserves the right to examine anything contained within the study guide at any examination session. This includes knowledge, techniques, principles, theories, and concepts as specified.

For the financial accounting, audit and assurance, law and tax papers, ACCA will publish *examinable documents* every six months to indicate exactly what regulations and legislation could potentially be assessed at the following examination session.

Knowledge of new examinable regulations will not be assessed until at least six calendar months after the last day of the month in which documents are issued or legislation is passed. The relevant cut-off date for the June examinations is 30 November of the previous year, and for the December examinations, it is 31 May of the same year.

The study guide offers more detailed guidance on the depth and level at which the examinable documents will be examined. The study guide should therefore be read in conjunction with the examinable documents list.

Syllabus

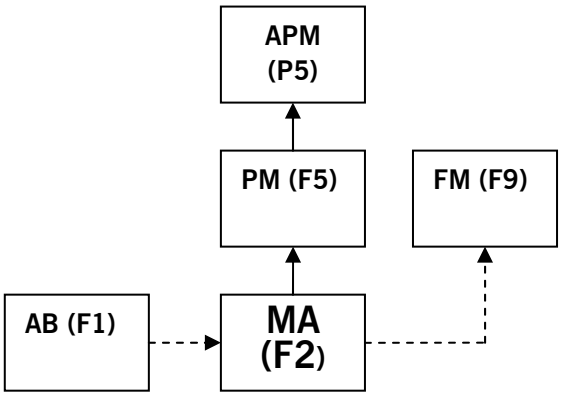

AIM

To develop knowledge and understanding of how to prepare and process basic cost and quantitative information to support management in planning and decision-making in a variety of business contexts.

MAIN CAPABILITIES

On successful completion of this paper, candidates should be able to:

A Explain the nature and purpose of cost and management accounting

B Describe costs by classification, behaviour and purpose

C Apply essential business mathematics and use computer spreadsheets

D Explain and apply cost accounting techniques

E Prepare and coordinate budgets and standard costing for planning, feedback and control

F Use management accounting techniques to make and support decision-making.

RELATIONAL DIAGRAM OF MAIN CAPABILITIES

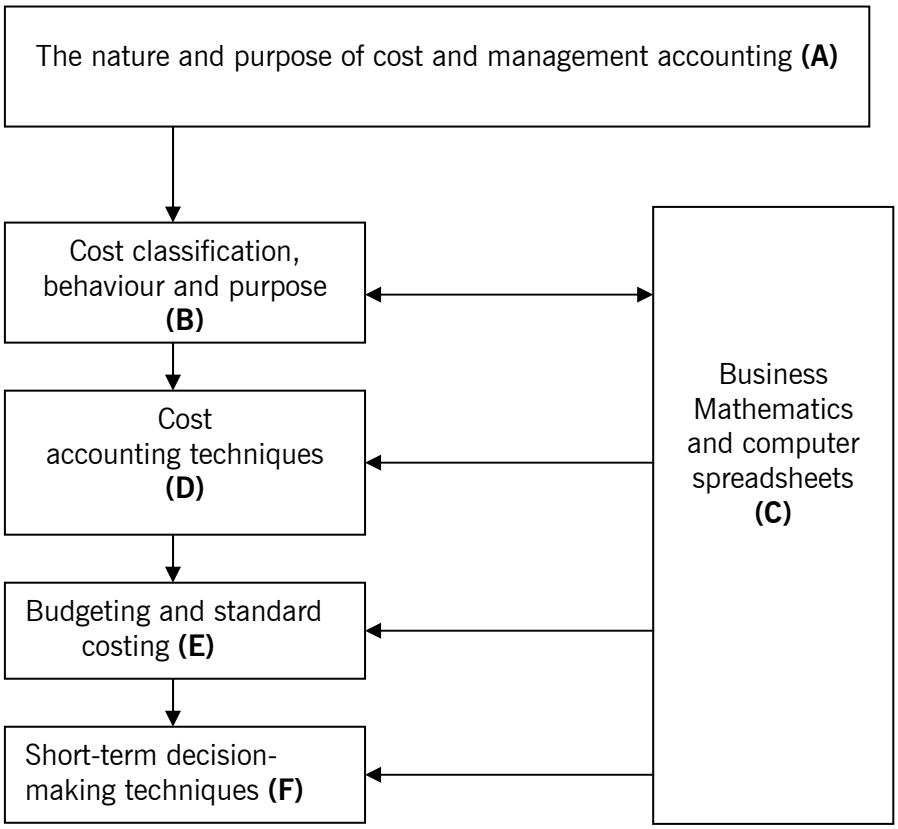

RATIONALE

The syllabus for Paper F2, *Management Accounting*, introduces candidates to costing principles and techniques, and elements of management accounting which are used to make and support decision-making.

The syllabus starts by introducing the nature and purpose of cost accounting, distinguishing it clearly from financial accounting. The next section is cost classification and behaviour. This is followed immediately by applied business mathematics and the use of computer spreadsheets, which are essential for candidates to understand the measurement and behaviour of business costs and to be able to classify them accordingly.

The next area of the syllabus represents a central part of this paper and it introduces candidates to a variety of costing techniques used in business. It is followed by the preparation and use of budgeting and standard costing as essential tools for planning and controlling business costs. The syllabus finishes with an introduction to the use of management accounting in supporting decision-making.

DETAILED SYLLABUS:

A The nature and purpose of cost and management accounting

1. Accounting for management
2. Cost and management accounting versus financial accounting

B Cost classification, behaviour and purpose

1. Production and non-production costs
2. Direct and indirect costs
3 Fixed and variable costs

C Business mathematics and computer spreadsheets

1. Dealing with uncertainty
2. Statistics for business
3. Use of computer spreadsheets

D Cost accounting techniques

1. Accounting for materials
2. Accounting for labour
3. Accounting for overheads
4. Marginal and absorption costing
5. Job and batch costing
6. Process costing
7. Service/operation costing

E Budgeting and standard costing

1. Nature and purpose of budgeting
2. Functional budgets
3. Flexible budgets and standard costing
4. Basic variance analysis under absorption and marginal costing
5. Reconciliation of budgeted profit to actual profit

F Short-term decision-making techniques

1. Cost-volume-profit analysis
2. Relevant costing
3. Limiting factors

APPROACH TO EXAMINING THE SYLLABUS

The syllabus is assessed by a two hour paper-based or computer-based examination. Questions will assess all parts of the syllabus and will include both computational and non computational elements. The examination will consist of 40 two-mark questions, and 10 one-mark questions.

Study Guide

A THE NATURE AND PURPOSE OF COST AND MANAGEMENT ACCOUNTING

1. Accounting for management

a) Distinguish between data and information.[1]

b) Identify and explain the attributes of good information.[1]

c) Outline the managerial processes of planning, decision making and control.[1]

d) Explain the difference between strategic, tactical and operational planning.[1]

e) Distinguish between cost, profit, investment and revenue centres.[1]

f) Describe the differing needs for information of cost, profit, investment and revenue centre managers.[1]

2. Cost and management accounting versus financial accounting

a) Describe the purpose and role of cost and management accounting within an organisation's management information system.[1]

b) Compare and contrast financial accounting with cost and management accounting.[1]

B COST CLASSIFICATION, BEHAVIOUR AND PURPOSE

1. Production and non-production costs

a) Explain and illustrate production and non-production costs.[1]

b) Describe the different elements of production cost - materials, labour and overheads.[1]

c) Describe the different elements of non-production cost – administrative, selling, distribution and finance.[1]

d) Explain the importance of the distinction between production and non-production costs when valuing output and inventories.[1]

2. Direct and indirect costs

a) Distinguish between direct and indirect costs in manufacturing and non-manufacturing organisations.[1]

b) Identify examples of direct and indirect costs in manufacturing and non-manufacturing organisations.[1]

c) Explain and illustrate the concepts of cost objects, cost units and cost centres.[1]

3. Fixed and variable costs

a) Describe and illustrate, graphically, different types of cost behaviour.[1]

b) Explain and provide examples of costs that fall into the categories of fixed, stepped fixed and variable costs.[1]

c) Use high/low analysis to separate the fixed and variable elements of total costs including situations involving stepped fixed costs and changes in the variable cost per unit.[2]

d) Explain the structure of linear functions and equations.[1]

C BUSINESS MATHEMATICS AND COMPUTER SPREADSHEETS

1. Dealing with uncertainty

a) Explain and calculate an expected value.[1]

b) Demonstrate the use of expected values in simple decision making situations.[1]

c) Explain the limitations of the expected value technique.[1]
(Decision trees and conditional profit tables are excluded).

2. Statistics for business

a) Calculate a correlation coefficient and a coefficient of determination.[1]

b) Explain the concepts in (a) and interpret the coefficients calculated in (a).[1]

c) Establish a linear function using regression analysis and interpret the results.[2]

3. Use of computer spreadsheets

a) Explain the role and features of a computer spreadsheet system.[1]

b) Demonstrate a basic understanding of the use of computer spreadsheets.[1]

c) Identify applications for computer spreadsheets in cost and management accounting.[1]

D COST ACCOUNTING TECHNIQUES

1. Accounting for materials

a) Describe the different procedures and documents necessary for the ordering, receiving and issuing of materials from inventory.[1]

b) Describe the control procedures used to monitor physical and 'book' inventory and to minimise discrepancies and losses.[1]

c) Interpret the entries and balances in the material inventory account.[1]

d) Identify and explain the costs of ordering and holding inventory.[1]

e) Calculate and interpret optimal reorder quantities.[2]

f) Calculate and interpret optimal reorder quantities when discounts apply.[1]

g) Produce calculations to minimise inventory costs when stock is gradually replenished.[1]

h) Describe and apply appropriate methods for establishing reorder levels where demand in the lead time is constant.[1]

2. Accounting for labour

a) Calculate direct and indirect costs of labour.[1]

b) Explain the methods used to relate input labour costs to work done.[1]

c) Prepare the journal and ledger entries to record labour cost inputs and outputs.[1]

d) Describe different remuneration methods: time-based systems, piecework systems and individual and group incentive schemes.[1]

e) Calculate the level, and analyse the costs and causes of labour turnover.[1]

f) Explain and calculate labour efficiency, capacity and production volume ratios.[1]

g) Interpret the entries in the labour account. [1]

3. Accounting for overheads

a) Explain the different treatment of direct and indirect expenses.[1]

b) Describe the procedures involved in determining production overhead absorption rates.[1]

c) Allocate and apportion production overheads to cost centres using an appropriate basis.[1]

d) Reapportion service cost centre costs to production cost centres (using the reciprocal method where service cost centres work for each other).[2]

e) Select, apply and discuss appropriate bases for absorption rates.[2]

f) Prepare journal and ledger entries for manufacturing overheads incurred and absorbed.[1]

g) Calculate and explain the under and over absorption of overheads.[1]

h) Apply methods of relating non-production overheads to cost units.[1]

4. Marginal and absorption costing

a) Explain the importance of, and apply, the concept of contribution.[1]

b) Demonstrate and discuss the effect of absorption and marginal costing on inventory valuation and profit determination.[2]

c) Calculate profit or loss under absorption and marginal costing.[2]

d) Reconcile the profits or losses calculated under absorption and marginal costing.[2]

e) Describe the advantages and disadvantages of absorption and marginal costing.[1]

5. Job and batch costing

a) Describe the characteristics of job and batch costing.[1]

b) Describe the situations where the use of job or batch costing would be appropriate.[1]

c) Prepare cost records and accounts in job and batch costing situations.[1]

d) Establish job costs from given information.[1]

6. Process costing

a) Describe the characteristics of process costing.[1]

b) Describe the situations where the use of process costing would be appropriate.[1]

c) Explain the concepts of normal and abnormal losses and abnormal gains.[1]

d) Calculate the cost per unit of process outputs.[1]

e) Prepare process accounts involving normal and abnormal losses and abnormal gains.[1]

f) Calculate and explain the concept of equivalent units.[1]

g) Apportion process costs between work remaining in process and transfers out of a process using the weighted average and FIFO methods.[2]

h) Prepare process accounts in situations where work remains incomplete.[2]

i) Prepare process accounts where losses and gains are identified at different stages of the process.[1]

j) Distinguish between by-products and joint products.[1]

k) Value by-products and joint products at the point of separation.[1]

l) Prepare process accounts in situations where by-products and/or joint products occur. [2] (Situations involving work in process **and** losses in the same process are excluded).

7. Service/operation costing

a) Identify situations where the use of service/operation costing is appropriate.[1]

b) Illustrate suitable unit cost measures that may be used in different service/operation situations.[1]

c) Carry out service cost analysis in simple service industry situations.[1]

E BUDGETING AND STANDARD COSTING

1. Nature and purpose of budgeting

a) Explain why organisations use budgeting.[1]

b) Explain the administrative procedures used in the budgeting process.[1]

c) Describe the stages in the budgeting process.[1]

2. Functional budgets

a) Explain the term 'principal budget factor'.[1]

b) Prepare budgets for sales, production, materials (usage and purchases), labour and overheads.[1]

3. Flexible budgets and standard costing

a) Explain and prepare fixed, flexible and flexed budgets.[1]

b) Explain the purpose and principles of standard costing.[1]

c) Establish the standard cost per unit under absorption and marginal costing.[1]

4. Basic variance analysis under absorption and marginal costing

a) Calculate the following variances: [1]
   i) Sales price and volume
   ii) Materials total, price and usage
   iii) Labour total, rate and efficiency
   iv) Variable overhead total, expenditure and efficiency
   v) Fixed overhead total, expenditure and, where appropriate, volume, capacity and efficiency.

b) Interpret all the variances in 4(a).[1]

c) Explain possible causes of all the variances in 4(a).[1]

d) Describe the interrelationships between the variances in 4(a).[1]

e) Calculate actual or standard figures where the variances in 4(a) are given.[1]

5. Reconciliation of budgeted profit and actual profit

a) Reconcile budgeted profit with actual profit under standard absorption costing.[1]

b) Reconcile budgeted profit or contribution with actual profit or contribution under standard marginal costing.[1]

F. SHORT-TERM DECISION-MAKING TECHNIQUES

1. Cost-volume-profit (CVP) analysis

a) Calculate and interpret a break-even point and a margin of safety.[2]

b) Demonstrate an understanding of, and use, the concepts of a target profit or revenue and a contribution to sales ratio.[2]

c) Identify the elements in traditional and contribution break-even charts and profit/volume charts.[1]

d) Apply CVP analysis to single-product situations.[2]
(Multi-product break-even charts and profit/volume charts are excluded).

2. Relevant costing

a) Explain the concept of relevant costing.[1]

b) Calculate the relevant costs for materials, labour and overheads.[2]

c) Calculate the relevant costs associated with non-current assets.[1]

d) Explain and apply the concept of opportunity cost.[1]

3. Limiting factors

a) Identify a single limiting factor.[1]

b) Determine the optimal production plan where an organisation is restricted by a single limiting factor.[2]

c) Formulate a linear programming problem involving two variables.[1]

d) Determine the optimal solution to a linear programming problem using a graphical approach.[1]

e) Use simultaneous equations, where appropriate, in the solution of a linear programming problem.[1]

READING LIST

ACCA's approved publishers:

BPP Professional Education
Contact number: +44(0)20 8740 2222
Website: www.bpp.com/acca

Kaplan Publishing Foulks Lynch
Contact number: +44(0)118 989 0629
Website: www.kaplanfoulkslynch.com

Additional reading:

Accountancy Tuition Centre (ATC) International
Contact number: +44(0)141 880 6469
Website: www.ptc-global.com

C. Drury, 2004. Management and Cost Accounting (6th edition), Thomson. ISBN 1861525362

Wider reading, including relevant articles in ACCA's *Student Accountant*, and other management accounting journals is encouraged.